SERIES 2
MAG DRIVE PUMP
125 WATT MOTOR
3/8" NPT PORTS
WITH RELIEF VALVE

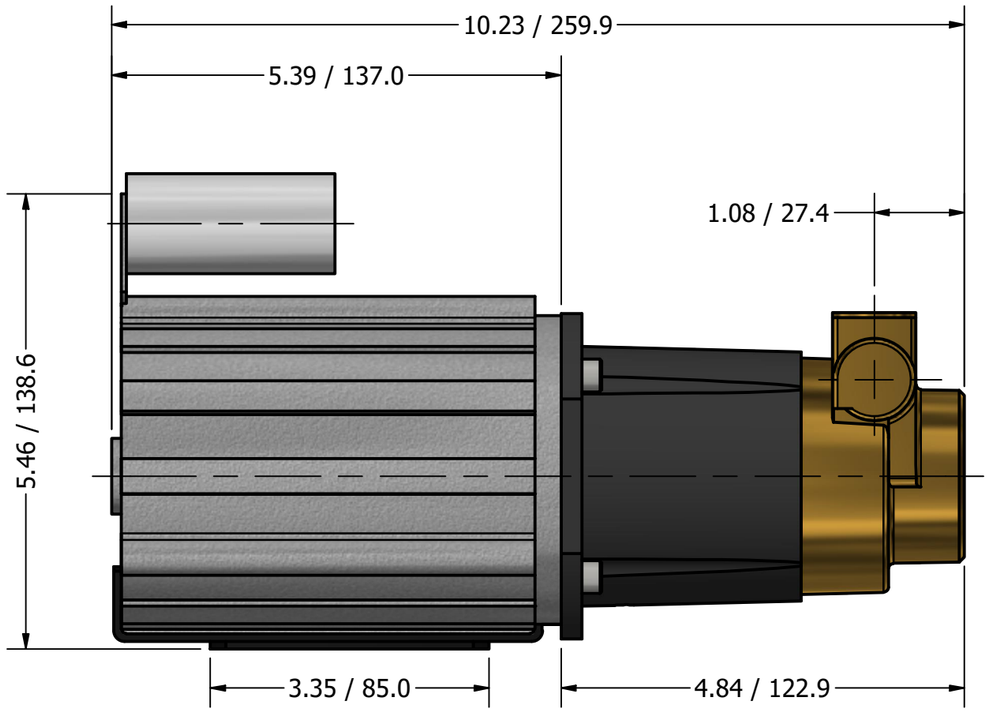

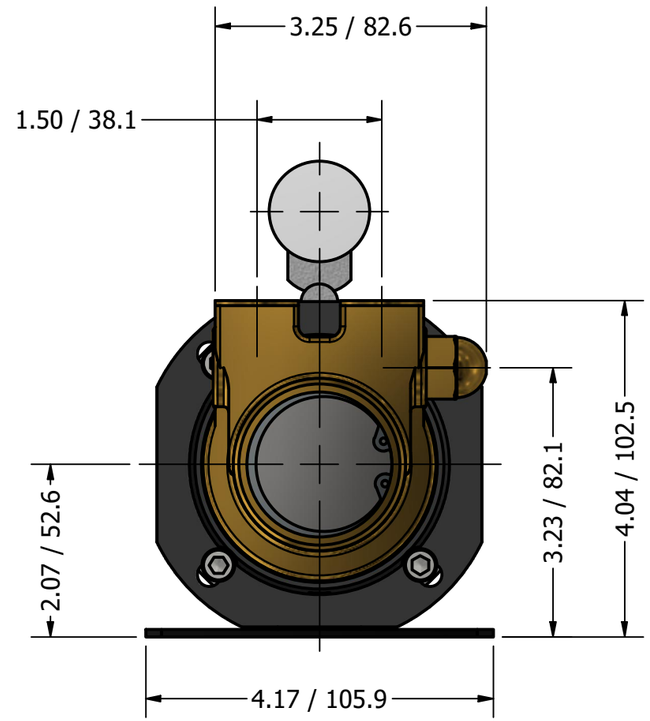

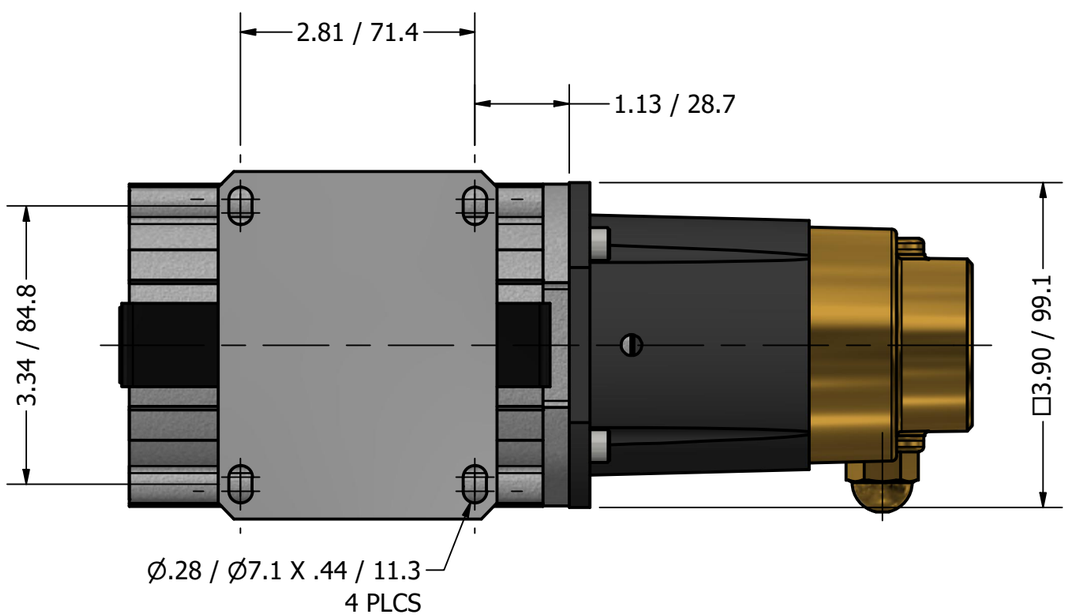

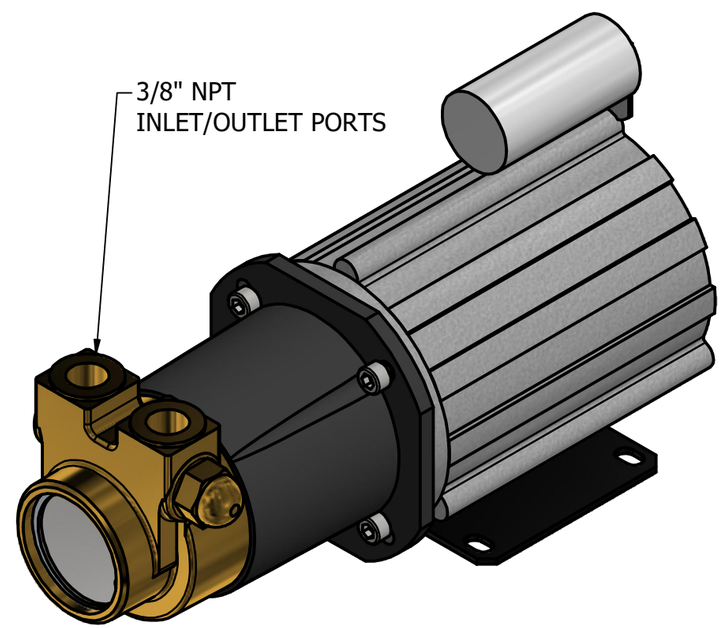

PROCON®
custom | fluid | solutions®

W3018 v2